# Application Note:

# LR1120 Reference Design Introduction

# Table of Contents


Table of Contents ..... 2
List of Figures ..... 3
List of Tables ..... 4
1 Introduction ..... 5
1.1 Purpose of this Document ..... 5
1.2 Scope of this Document ..... 5
2 LR1120 Kit Description ..... 6
3 LR1120 Description ..... 7
4 Schematics ..... 8
4.1 LR1120 Functional Blocks ..... 8
4.2 TCXO / XTAL ..... 9
4.3 LDO / DCDC ..... 10
4.4 Active or Passive GNSS Antenna ..... 11
4.5 Mbed ..... 12
4.5.1 Test Points ..... 12
4.5.2 LEDs ..... 12
5 Software ..... 13
6 Reference Design Versions ..... 14
6.1 LR1120MB1xIS - E655V01A ..... 15
6.1.1 Schematic ..... 15
6.1.2 Layout ..... 16
6.2 LR1120MB1xJS - E656V01A ..... 19
6.2.1 Schematic ..... 19
6.2.2 Layout ..... 20
7 References ..... 21
8 Revision History ..... 22

# List of Figures

Figure 1: LR1120DVK1TxKS Kit....6
Figure 2: LR1120 RF Path Schematic....7
Figure 3: LR1120 Schematic Blocks....8
Figure 4: TCXO and XTAL Footprint....9
Figure 5: TCXO and XTAL Schematic....9
Figure 6: Inductor L1 for DC-DC....10
Figure 7: GNSS Path with LNA for Passive Antenna....11
Figure 8: GNSS Path with Supply Control for Active Antenna....11
Figure 9: LR1120 and RF Switches Power Supply Connectors....12
Figure 10: LEDs Available....12
Figure 11: PCB E655V01A Schematic....15
Figure 12: PCB E655V01A Top Layer....16
Figure 13: PCB E655V01A Second Layer....17
Figure 14: PCB E655V01A Third layer....17
Figure 15: PCB E655V01A Bottom Layer....18
Figure 16: PCB E656V01A Schematic....19
Figure 17: PCB E656V01A Top Layer....20

# List of Tables

Table 1: LR1120 RF Path Description ..... 7
Table 2: Reference Design PCB version ..... 14

# 1 Introduction

Selecting the correct reference design is an important starting point of any product. The reference designs presented in this application note have been fully tested and validated by Semtech and are suitable as the basis for a variety of products.

Additionally, these references designs are provided with a Software Development Kit (SDK) and codes examples for a quick project start.

## 1.1 Purpose of this Document

This application note describes the differences between each reference design, the key components, and design methodology deployed for the LR1120 chip.

## 1.2 Scope of this Document

It is recommended to read this application note in conjunction with the following documents:

- LR1120 Datasheet
- LR1120 User Manual
- AN1200.56 LR1110 Evaluation Kit: While written for the LR1110 product, it is also relevant to the LR1120.
- AN1200.66 PCB Design Guidelines: This application note details each functional block of the LR11xx family's RF integrated circuit architecture and describes how best to integrate the chip in an application.

# 2 LR1120 Kit Description

Semtech's LR1120 kit (LR1120DVK1TxKS) is available in 3 formats with different part numbers and regions:

- LR1120DVK1T**C**KS for US
- LR1120DVK1T**B**KS for EU
- LR1120DVK1T**G**KS for China

Each LR1120DVK1T**x**KS kit is composed of:

- 2x LR1120 Mbed shields
  - PCB E655V01A, equipped with an integrated GNSS LNA for passive antenna applications.
  - PCB E656V01A, without GNSS LNA but with power supply for active antenna usage.
- 1x STM32L476RG Nucleo board.
- 1x GNSS active antenna with SMA connection: *Taoglas P/N: AA.105.301111*.
- 1x GNSS passive patch antenna with SMA connection: *Taoglas P/N: GP.1575.25.2.A.02.*
- 1x 2.4 GHz antenna with SMA connection: *Pulse Electronics P/N: W1010.*
- 1x region specific Sub-GHz antenna with SMA connection
  - For US kit (915MHz): *Linx Tech P/N: ANT-916-CW-HWR-SMA*
  - For EU kit (868 MHz): *Linx Tech P/N: ANT-868-CW-HWR-SMA*
  - For China kit (490 MHz): *Wutong P/N: WTTX-D470SMA-171054B-2*

The PCBs E655V01A and E656V01A have a common Bill of Materials (BOM) for US and EU version and a separate BOM for China (see Table 2).

**Figure 1: LR1120DVK1TxKS Kit**

# 3 LR1120 Description

The LR1120 supports three different RF paths, as represented by the simplified schematic below.

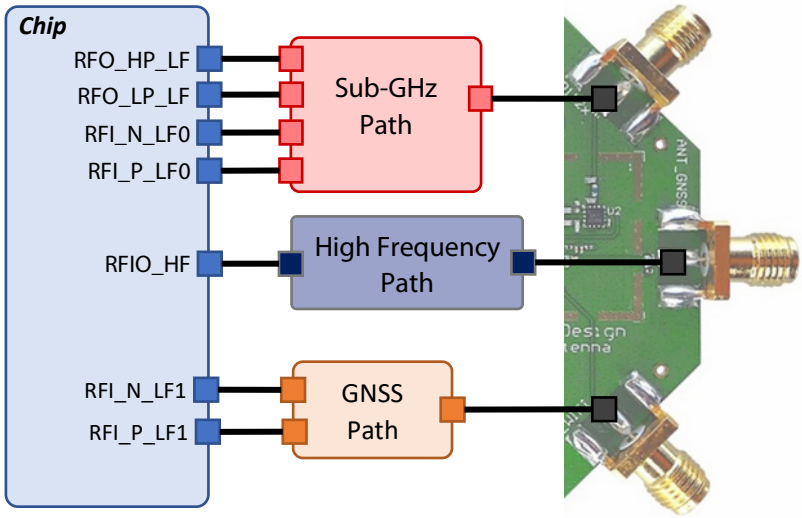


**Figure 2: LR1120 RF Path Schematic**

The LR1120 supports LoRa®, GFSK and Long Range-Frequency Hopping Spread Spectrum (LR-FHSS) modulation on both sub-GHz and High Frequency (HF) paths. It also supports GNSS signal demodulation on the GNSS path, as well as passive Wi-Fi® Mac address scanning on the RFIO-HF [1] .

**Table 1: LR1120 RF Path Description**

| RF Path | Frequency | Directional | Application |
|---|---|---|---|
| Sub-GHz | 150 MHz – 960 MHz | Tx/Rx | LoRa / GFSK / LR-FHSS |
| High Frequency (HF) | 1.9 GHz – 2.7 GHz | Tx/Rx | LoRa / GFSK / LR-FHSS / Wi-Fi (Rx) |
| GNSS | 1.57542 GHz and 1.5611 GHz | Rx only | GPS / BeiDou |

Please note that the LR1120 has all the features of an LR1110 [2] with two differences:

- It has both Tx and Rx for GFSK and LoRa, plus LR-FHSS transmit capability on the HF path.
- Currently, Modem-E is only available for LR1110.

# 4 Schematics

## 4.1 LR1120 Functional Blocks

Figure 3 shows the main functional blocks of the LR1120. Semtech also provides additional details on these blocks within the LR1110 Application Notes [3] .

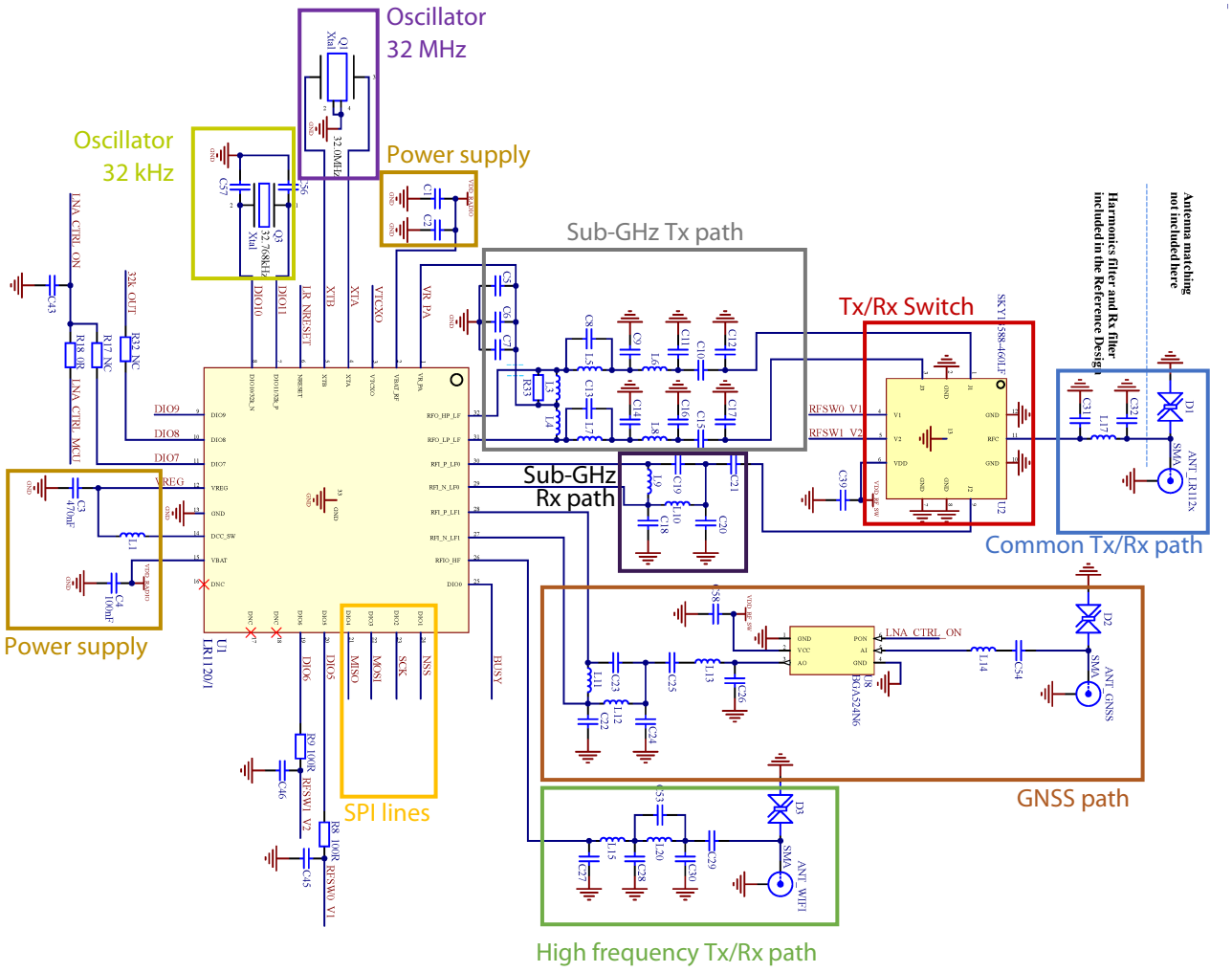


**Figure 3: LR1120 Schematic Blocks**

## 4.2 TCXO / XTAL

Each LR1120 reference design provided by Semtech has footprint components for both TCXO and crystal implementations for the 32 MHz reference frequency oscillator. If a crystal is used, a thermal relief must be implemented as specified in the reference design.

GNSS applications require a TCXO and a 32.768 kHz clock source. Semtech provides a list of compatible and validated TCXOs [4].

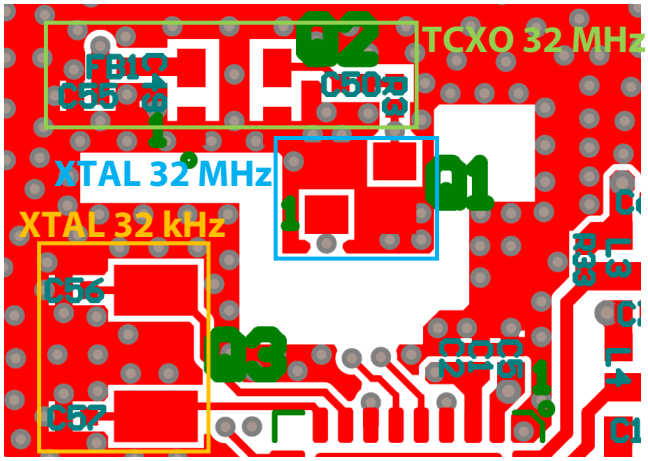


**Figure 4: TCXO and XTAL Footprint**

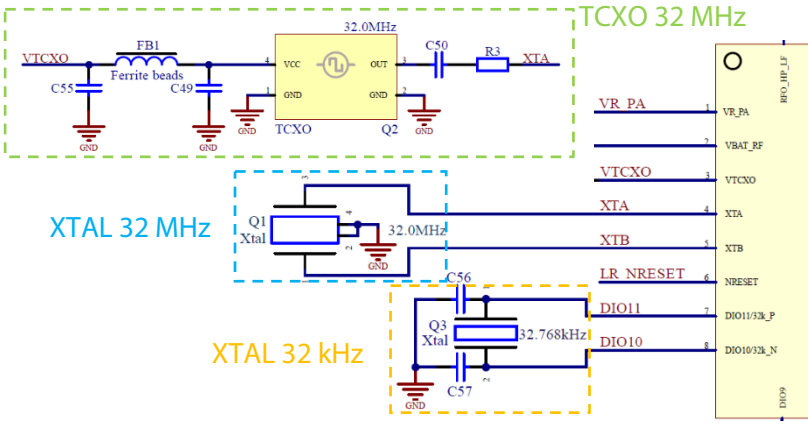


**Figure 5: TCXO and XTAL Schematic**

# 4.3 LDO / DCDC

Two forms of voltage regulation (DC-DC or LDO) are available depending upon the design priorities of the application. The choice between an internal LDO or a DC-DC converter ultimately comes down to the tradeoffs between PCB size, component cost, and power efficiency.

- **LDO**: Offers the benefits of smaller size and lower cost, through the elimination of an inductor (15 µH) between pins 12 (VREG) and 14 (DCC_SW), but at the expense of power efficiency.
- **DC-DC**: Offers higher power efficiency, with an additional cost of an inductor. DC-DC is not compatible for output power greater than +17 dBm.

Inductor L1 is populated in all reference designs provided by Semtech enabling DC-DC operation. It is possible to evaluate the LDO configuration while the L1 inductor is populated by using the LR1120 user commands.

L1 can be removed if the end application uses an LDO implementation.

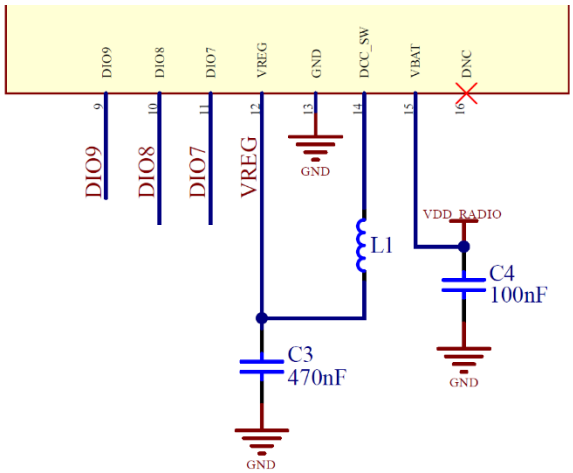


**Figure 6: Inductor L1 for DC-DC**

# 4.4 Active or Passive GNSS Antenna

Reference designs provided by Semtech can have two different implementations on the GNSS path:

- **Passive antenna**: The RF path of the PCBs E655V01A PCB has an external LNA (Infineon BGA52N6), shown in Figure 7, to provide optimum sensitivity in passive antenna implementations. This LNA is supplied on VDD_RF_SW. The LNA supply must have a decoupling capacitor C58 close to the VCC pin. The LNA is controlled by the LNA_CTRL_ON, connected to either the STM32L476 Nucleo pins (LNA_CTRL_MCU), or by the LR1120 itself (DIO7) using 0 Ohm assembly options. However, Semtech recommend driving the LNA through a MOS between VBAT and LNA VCC to guarantee a clean and stable supply.

- **Active antenna**: The E656V01A PCB does not implement an LNA, as an active antenna already integrates a GNSS LNA. An external power supply, shown in Figure 8, provides 3.3 V on the RF line of the GNSS path.
  The active antenna supply is activated by either the STM32L476 Nucleo pins (ANT_CTRL_MCU), or by the LR1120 itself (DIO7) using a 0 Ω resistor assembly option.

In order to optimize the GNSS reception, the GNSS antenna should be placed in priority on the PCB and the maximum lobe of the radiation pattern should point toward the sky [5].

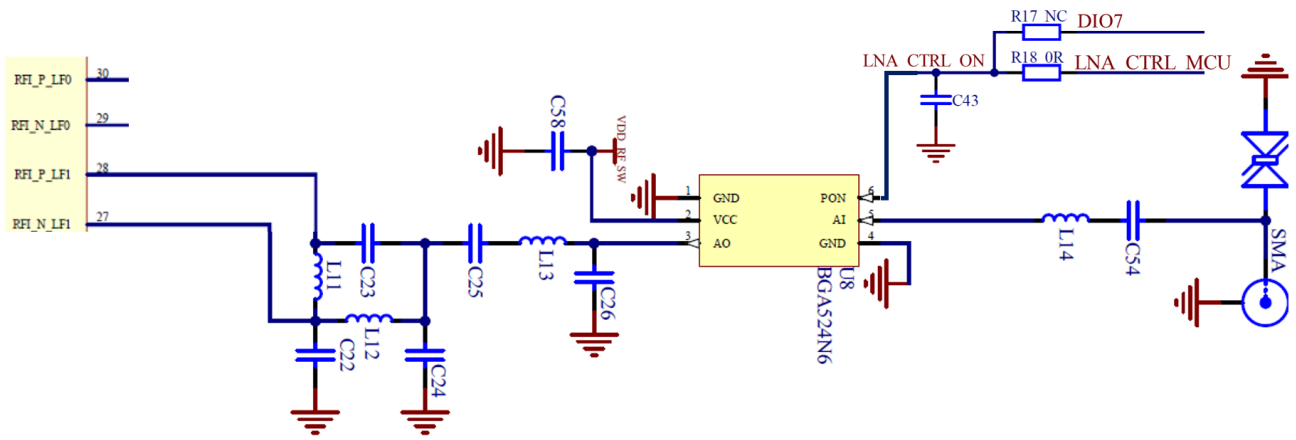


**Figure 7: GNSS Path with LNA for Passive Antenna**

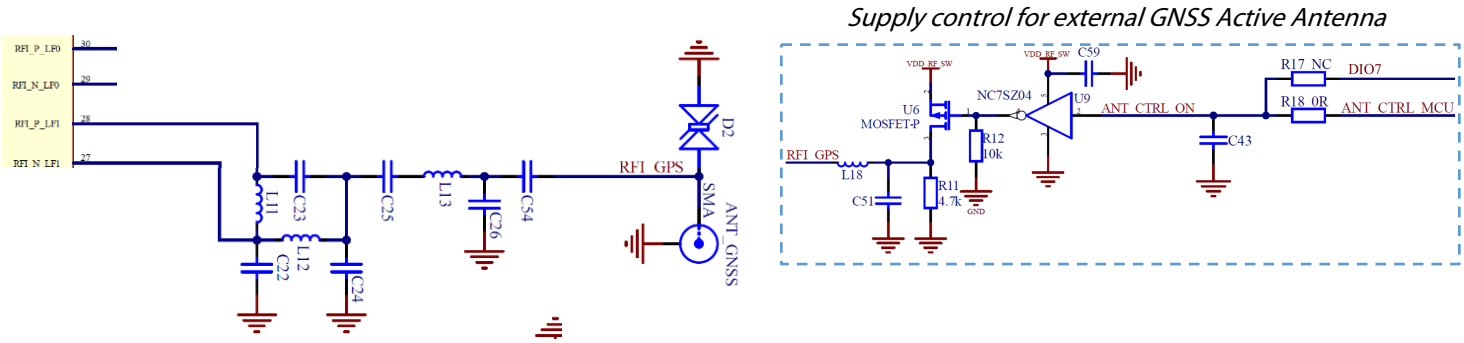


**Figure 8: GNSS Path with Supply Control for Active Antenna**

# 4.5 Mbed

Numerous test points are available on the Evaluation Kit, allowing to monitor the LR1120's power consumption or voltage levels, and to give access to the STM32L476RG Nucleo pins for debug or evaluation purposes.

## 4.5.1 Test Points

The LR1120's current consumption can be monitored on the VDD_RADIO jumper.

The RF switch's current consumption can be monitored on the VDD_RF_SW jumper.

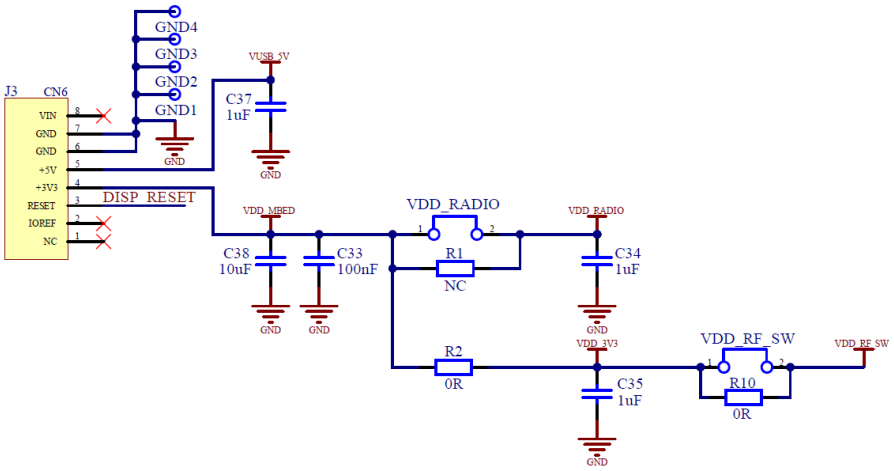


**Figure 9: LR1120 and RF Switches Power Supply Connectors**

## 4.5.2 LEDs

Two LEDs (green and red) on the LR1120 Evaluation Kit allow monitoring of the sub-GHz RX and TX operations. An additional yellow LED is dedicated to GPS and Wi-Fi scan indication.

These LEDs are controlled by the STM32L476RG Nucleo, and are freely available to the user.

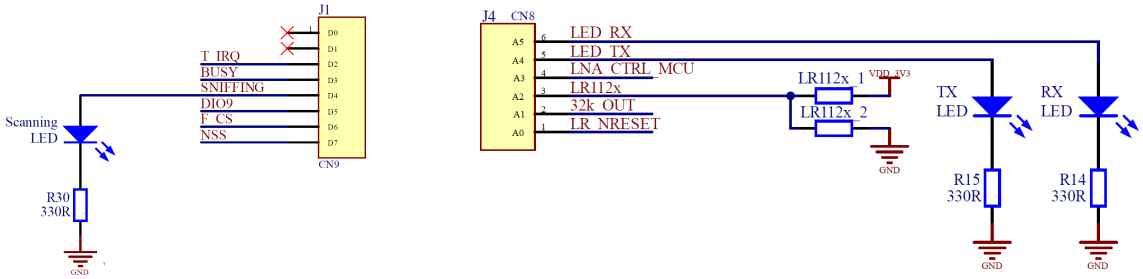


**Figure 10: LEDs Available**

# 5 Software

All LR1120 reference designs are provided with a Software Development Kit (SDK) available on Lora-net GitHub.

This SDK is compatible with all the LR11xx family and is developed for use with the STMicroelectronics NUCLEO-L476RG development board.

All basic functionalities have ready-to-use code examples, such as Tx continuous wave, Ping-pong and GNSS scan.

These examples can be used to evaluate product performance. This SDK is free to be copied and modified to fit your application.

The toolchains available for compiling the examples are:

- Keil® MDK ARM
- GNU Arm® Embedded Toolchain

# 6 Reference Design Versions

There are currently two LR1120 reference design PCBs. Each PCB has a different BOM which covers the majority of the sub-GHz ISM frequency bands around the world. The reference designs are available on the Semtech website.

The key differences are:

- PCB E656V01A reference design's GNSS path is not populated with an LNA, instead, an external power can be used for an active GNSS antenna.
- PCB E655V01A reference design is delivered with three different BOM (US/EU/China) and optimized to support all sub-GHz and 2.4 GHz ISM frequency bands.

Following these reference designs as closely as possible will substantially reduce the risk of issues on the design (ex. overconsumption, unwanted emissions). In practice, a final product never looks like a reference design, so it is the designer's responsibility to conscientiously integrate and modify the reference design [6] .

**Table 2: Reference Design PCB version**

| Chip | PCB number | GNSS Antenna | PCB layers | Clock Reference | Region | P/N | Band (MHz) |
|---|---|---|---|---|---|---|---|
| LR1120 | E655V01A | Passive | 4 | TCXO (or Xtal) | US / EU | LR1120MB1DIS | 902 – 928 / 863 – 870 |
| | | | | | China | LR1120MB1GIS | 490 |
| | E656V01A | Active | 4 | TCXO (or Xtal) | US / EU | LR1120MB1DJS | 902 – 928 / 863 – 870 |
| | | | | | China | LR1120MB1GJS | 490 |

# 6.1 LR1120MB1xIS - E655V01A

The PCB E655V01A reference design is delivered with three different BOM (US/EU/China) and optimized to support all sub-GHz and 2.4 GHz ISM frequency bands.

- The LP path is designed to deliver +14 dBm (with the DC-DC supply).
- The HP path is designed to deliver +22 dBm (with LDO supply).
- The HF path is designed to deliver +13 dBm (with the DC-DC supply).

## 6.1.1 Schematic

The configuration of the LR1120 E655V01A reference design is with L1 populated, ready to be powered by DC - DC.

The 32 MHz TCXO and the 32.768 kHz Xtal are populated for GNSS application.

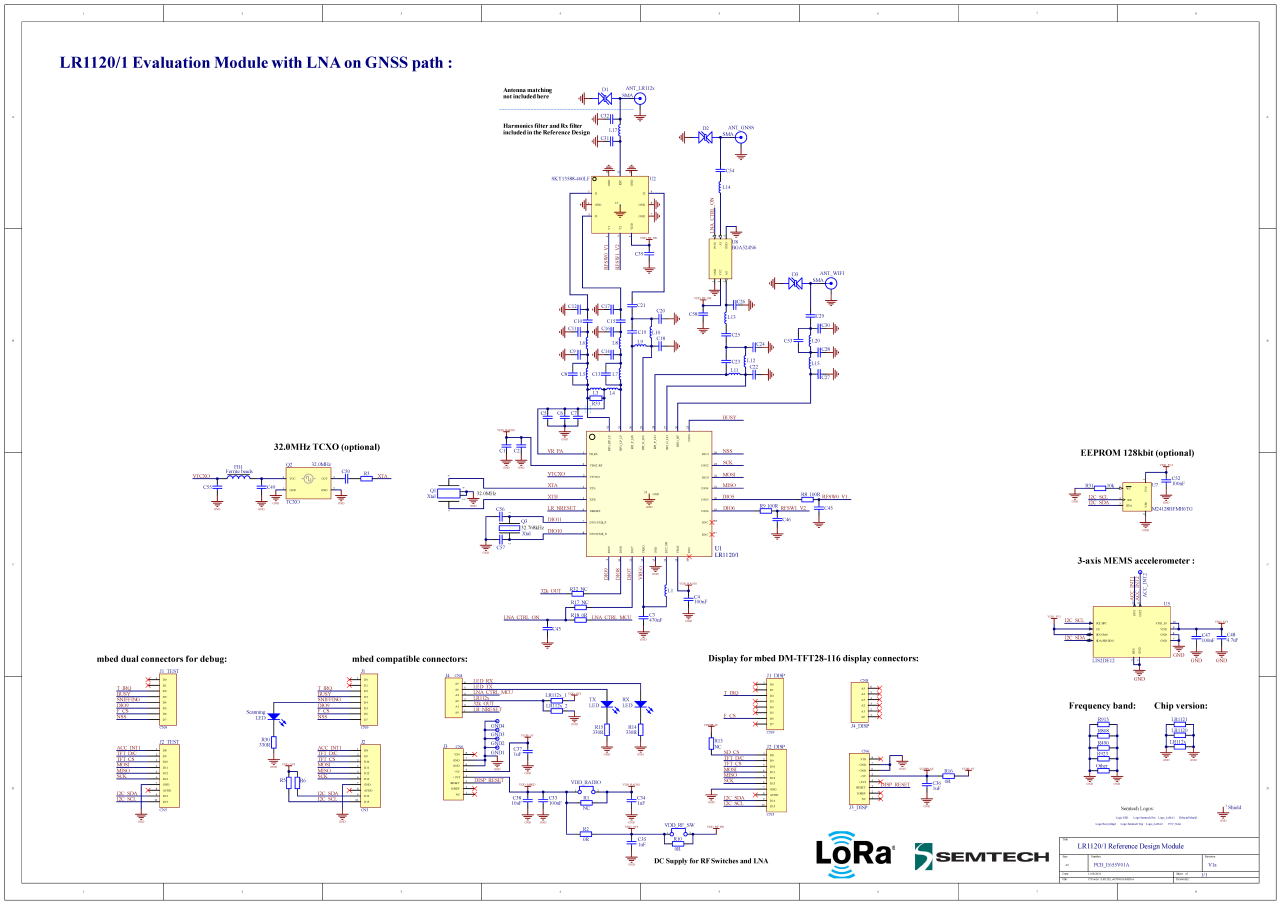


**Figure 11: PCB E655V01A Schematic**

## 6.1.2 Layout

This LR1120 reference design PCB E655V01A is designed on a low-cost, standard four-layer FR-4 substrate. The top layer houses all of the components and critical RF layout. The second layer serves as a full ground plane for RF. The third layer is for analog and digital signals. The bottom layer serves as ground.

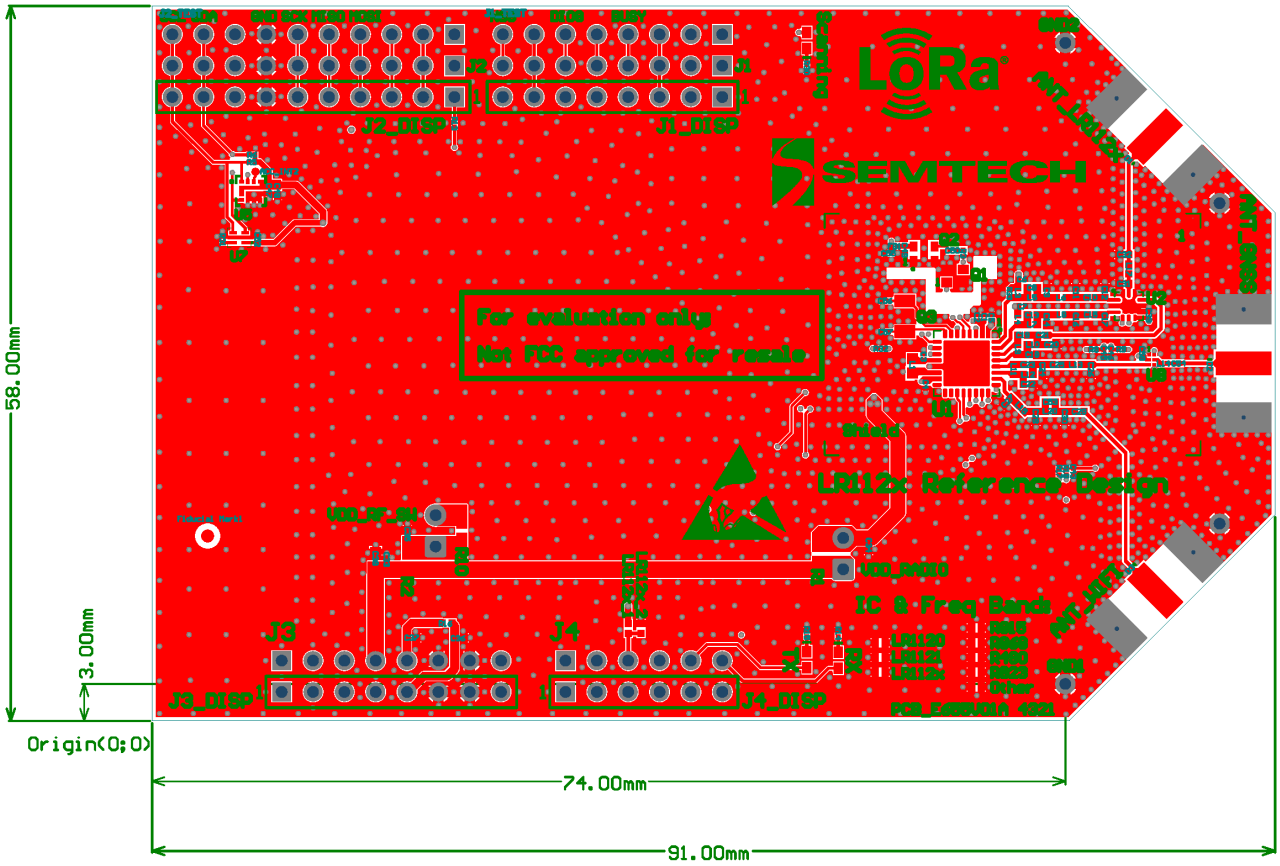


**Figure 12: PCB E655V01A Top Layer**

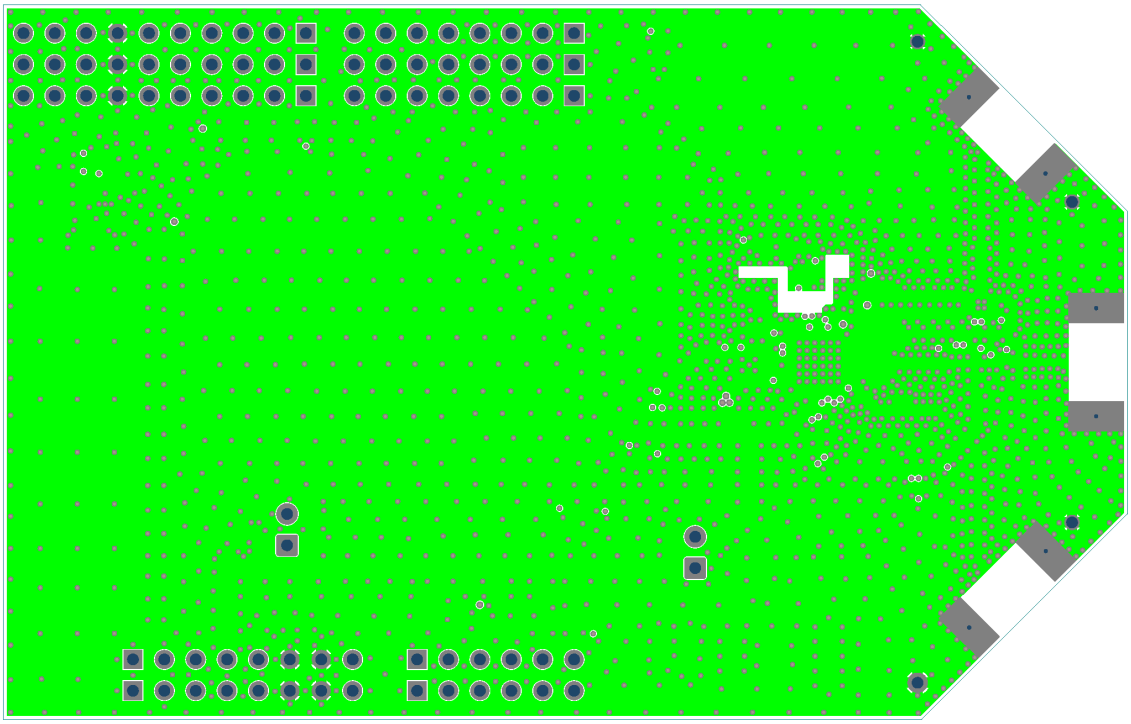

**Figure 13: PCB E655V01A Second Layer**

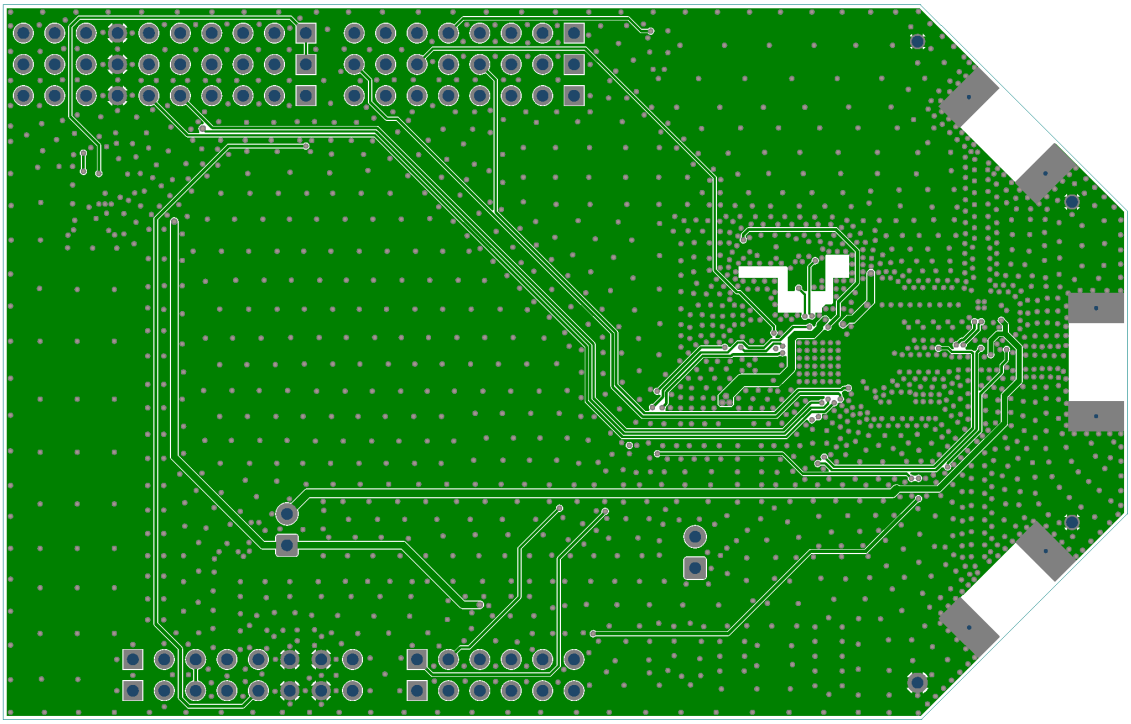

**Figure 14: PCB E655V01A Third layer**

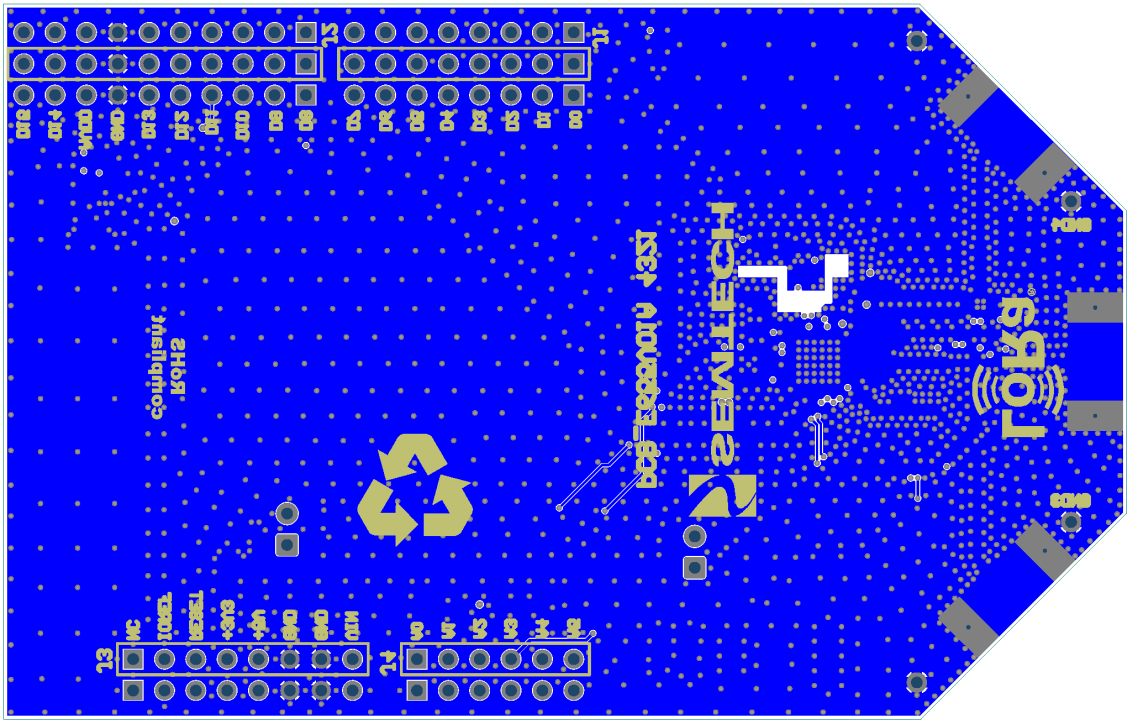
J3
J1
J2
J4
GND
GND
LORA
SEMTECH
PCB E655V01A ©2021
RoHS
compliant
NC
RESET
+3V3
+5V
GND
GND
GND
NC
NC
NC

# 6.2 LR1120MB1xJS - E656V01A

The key difference with PCB E656V01A is that the GNSS path is not populated with an LNA, instead, an external power can be used for active GNSS antenna.

The LP path is designed to deliver +14 dBm (with the DC-DC supply).

The HP path is designed to deliver +22 dBm (with LDO supply).

The HF path is designed to deliver +13 dBm (with the DC-DC supply).

## 6.2.1 Schematic

The configuration of the LR1120 E656V01A reference design is with L1 populated, ready to be powered by DC - DC.

The 32 MHz TCXO and the 32.768 kHz Xtal are populated for GNSS application.

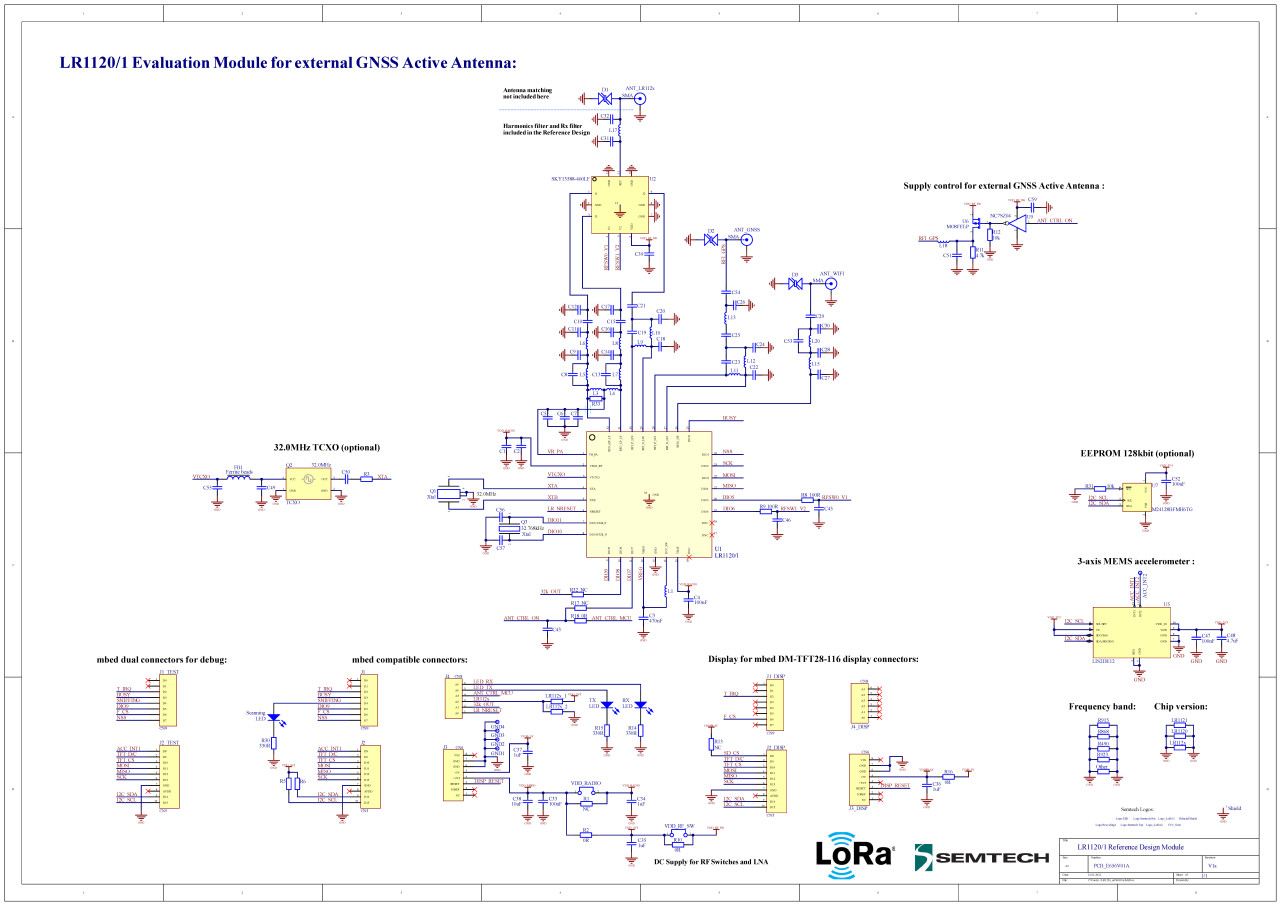


**Figure 16: PCB E656V01A Schematic**

### 6.2.2 Layout

The layout is almost identical to the LR1120 PCB E655V01A.

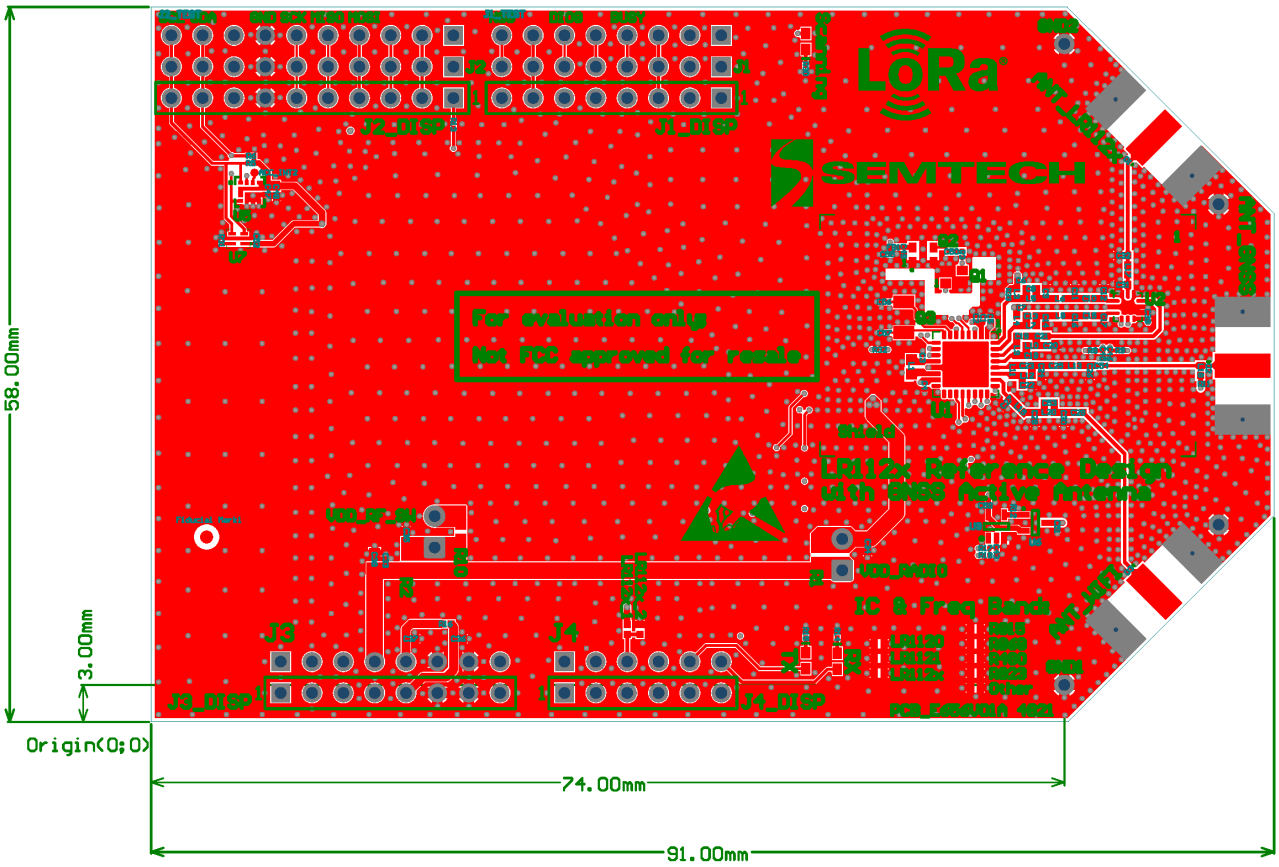


**Figure 17: PCB E656V01A Top Layer**

# 7 References

[1] **Semtech** – Datasheet LR1120 - DS.LR1120.W.APP

[2] **Semtech** – Datasheet LR1110 - DS.LR1110.W.APP

[3] **Semtech** – AN1200.56 LR1110 Evaluation Kit

[4] **Semtech** – AN1200.59 LoRa Reference Clock Selection

[5] **Semtech** - AN1200.69 GNSS Antenna Performance Optimization Evaluation

[6] **Semtech** - AN1200.66 PCB Design Guidelines

# 8 Revision History

| Version | ECO | Date | Changes and/or Modifications |
|---|---|---|---|
| 1.0 | 061089 | April 2022 | Initial Version |
| 1.1 | 063557 | Sept 2022 | Add external GNSS LNA details |

## Important Notice

Information relating to this product and the application or design described herein is believed to be reliable, however such information is provided as a guide only and Semtech assumes no liability for any errors in this document, or for the application or design described herein. Semtech reserves the right to make changes to the product or this document at any time without notice. Buyers should obtain the latest relevant information before placing orders and should verify that such information is current and complete. Semtech warrants performance of its products to the specifications applicable at the time of sale, and all sales are made in accordance with Semtech's standard terms and conditions of sale.

SEMTECH PRODUCTS ARE NOT DESIGNED, INTENDED, AUTHORIZED OR WARRANTED TO BE SUITABLE FOR USE IN LIFE-SUPPORT APPLICATIONS, DEVICES OR SYSTEMS, OR IN NUCLEAR APPLICATIONS IN WHICH THE FAILURE COULD BE REASONABLY EXPECTED TO RESULT IN PERSONAL INJURY, LOSS OF LIFE OR SEVERE PROPERTY OR ENVIRONMENTAL DAMAGE. INCLUSION OF SEMTECH PRODUCTS IN SUCH APPLICATIONS IS UNDERSTOOD TO BE UNDERTAKEN SOLELY AT THE CUSTOMER'S OWN RISK. Should a customer purchase or use Semtech products for any such unauthorized application, the customer must indemnify and hold Semtech and its officers, employees, subsidiaries, affiliates, and distributors harmless against all claims, costs damages and attorney fees which could arise.

The Semtech name and logo are registered trademarks of the Semtech Corporation. The LoRa® Mark is a registered trademark of the Semtech Corporation. All other trademarks and trade names mentioned may be marks and names of Semtech or their respective companies. Semtech reserves the right to make changes to, or discontinue any products described in this document without further notice. Semtech makes no warranty, representation, or guarantee, express or implied, regarding the suitability of its products for any particular purpose. All rights reserved.

© Semtech 2022

## Contact Information

Semtech Corporation
Wireless & Sensing Products
200 Flynn Road, Camarillo, CA 93012
E-mail: sales@semtech.com
Phone: (805) 498-2111, Fax: (805) 498-3804
www.semtech.com